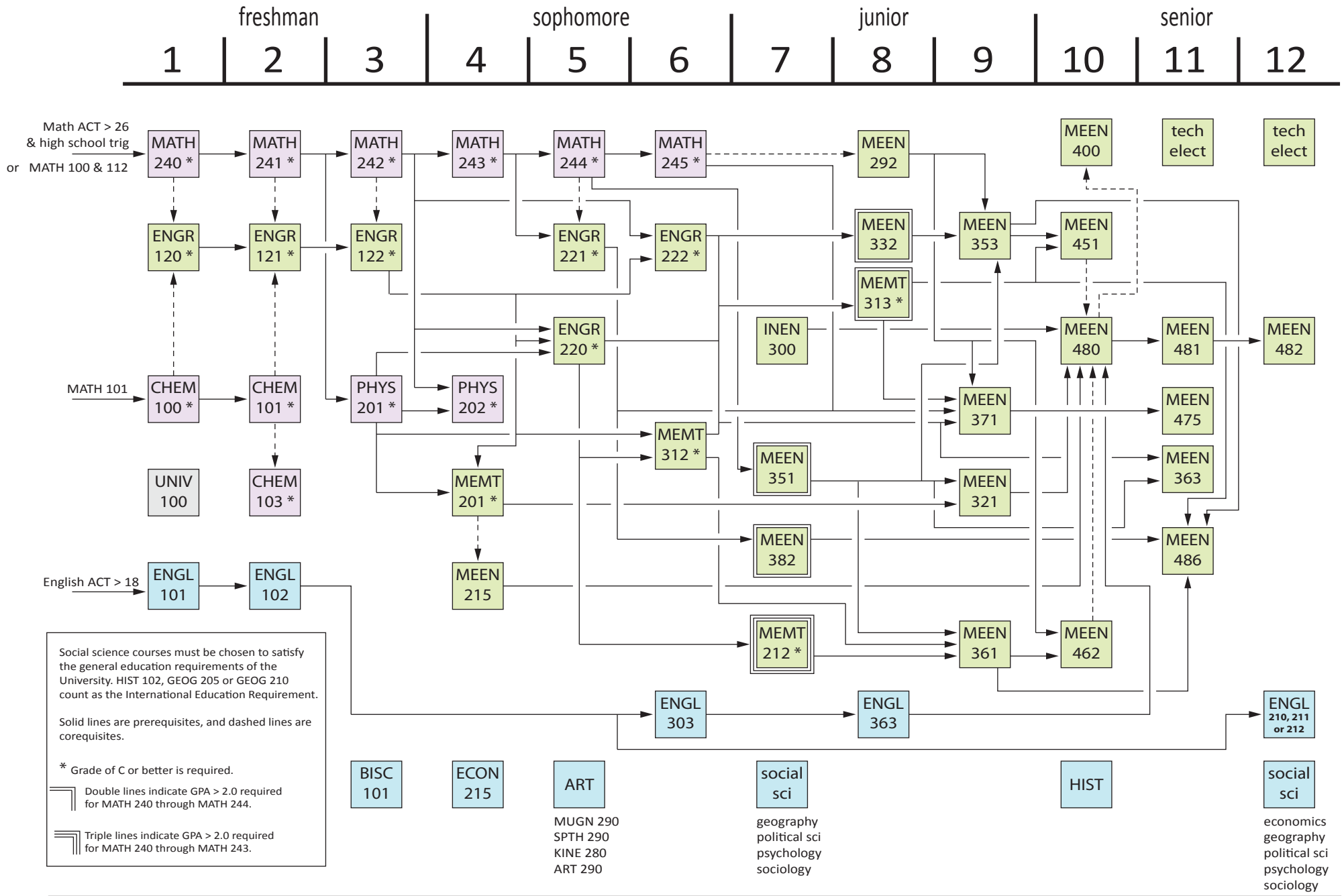

LOUISIANA TECH UNIVERSITY

Mechanical Engineering Curriculum Flowsheet (November 2009)